February 2014

Type HSR Pressure Reducing Regulator for Residential, Commercial or Industrial Applications

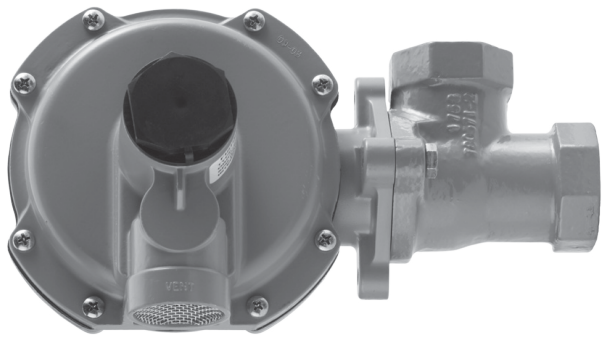

P1524

TYPE HSR ANGLE BODY

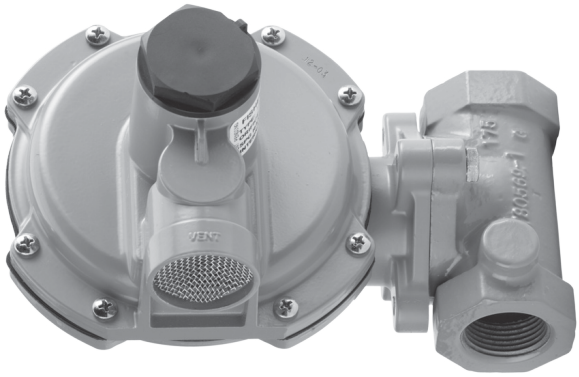

P1275

TYPE HSR STRAIGHT

Figure 1. *Type HSR Pressure Reducing Regulator*

WARNING

Failure to follow these instructions or to properly install and maintain this equipment could result in an explosion and/or fire causing property damage and personal injury or death.

Fisher™ regulators must be installed, operated and maintained in accordance with federal, state and local codes, rules and regulations and Emerson Process Management Regulator Technologies, Inc. instructions.

If the regulator vents gas or a leak develops in the system, service to the unit may be required.

Failure to correct trouble could result in a hazardous condition.

Call a gas service person to service the unit. Only a qualified person shall install or service the regulator.

Introduction

Scope of the Manual

This manual provides instructions for the installation, adjustment, maintenance and parts ordering information for the Type HSR residential and/or industrial/commercial pressure regulator.

Description

The Type HSR direct-operated, spring-loaded regulators with internal relief provide economical pressure reducing control in a variety of residential, commercial and industrial applications. These regulators can be used with natural, manufactured or liquefied petroleum gases. In addition, the Type HSR regulator has internal relief across the diaphragm to help minimize overpressure. Any outlet pressure above the start-to-discharge point of the nonadjustable relief valve spring moves the diaphragm off the relief valve seat, allowing excess pressure to bleed out through the screened spring case vent.

FISHER™

EMERSON™

Specifications

This section lists the specifications of Type HSR. Factory specification such as type number, orifice size, spring range and date of manufacture are stamped on the nameplate fastened on the regulator at the factory.

Body Sizes (Inlet x Outlet) and End Connection Styles
3/4, 3/4 x 1 and 1 NPT
All sizes available in Globe or Angle body.

Allowable Inlet Pressures[1]
Emergency: 150 psig / 10.3 bar
Maximum Operating Pressure: See Table 1

Allowable Outlet Pressures[1]
Emergency (Casing): 25 psig / 1.7 bar
Maximum Operating Pressure to Avoid Internal Parts Damage: 3 psi / 0.21 bar differential above outlet pressure setting

Outlet Pressure Ranges
See Table 2

Spring Case Vent Connection
Standard: 1 NPT with removable screen
Optional: 3/4 NPT with removable screen

Flow and Sizing Coefficients
See Table 4

Temperature Capabilities
-20 to 160°F / -29 to 71°C

Internal Relief Performance
Approximate Internal Relief Start-To-Discharge Point:
6 to 12 in. w.c. / 15 to 30 mbar above outlet pressure setting (Applies to 6 to 8 in. w.c. / 15 to 20 mbar and 8 to 10 in. w.c. / 20 to 25 mbar springs only.)
Relief Performance: See Figures 4 and 5

Lockup Performance During Normal Operation

ORIFICE SIZE		LOCKUP ABOVE SETPOINT	
In.	mm	In. w.c.	mbar
1/8	3.2	1	2
3/16	4.8	1	2
1/4	6.4	2	5
3/8	9.5	2.5	6
1/2	13	3	7

Pressure Setting Adjustment
Adjusting Screw

Pressure Registration
Internal

Approximate Weight
4 lbs / 2 kg

Designed, Tested and Evaluated Consistent with:
ANSI B109.4 / CSA 6.18

1. The pressure/temperature limits in this Instruction Manual and any applicable standard or code limitation should not be exceeded.

Table 1. *Maximum Operating Inlet Pressures*

ORIFICE SIZE		WIDE-OPEN C_g FOR RELIEF SIZING	MAXIMUM OPERATING INLET PRESSURE TO OBTAIN GOOD REGULATING PERFORMANCE	
In.	mm		psig	bar
1/8	3.2	12.5	125	8.6
3/16	4.8	28.2	100	6.9
1/4	6.4	50.0	60	4.1
3/8	9.5	105	30	2.1
1/2	13	185	20	1.4

Table 2. *Outlet Pressure Ranges*

OUTLET PRESSURE RANGE		SPRING PART NUMBER	SPRING COLOR	STANDARD CLOSING CAP COLOR	SPRING WIRE DIAMETER		SPRING FREE LENGTH	
In. w.c.	mbar				In.	mm	In.	mm
4 to 6	10 to 15	T14398T0012	Orange	Black	0.062	1.57	3.40	86.4
6 to 8	15 to 20	T14399T0012	Yellow	Black	0.067	1.70	3.61	91.4
8 to 10	20 to 25	T14405T0012	Black	Black	0.067	1.70	3.71	94.0
10 to 12.5	25 to 31	T14400T0012	Silver	Black	0.072	1.83	4.10	104
12.5 to 20	31 to 50	T14401T0012	Gray	Black	0.080	2.03	3.60	91.4
20 to 35	50 to 87	T14402T0012	Pink	Black	0.093	2.36	3.52	88.9
1.25 to 2.2 psig	0.09 to 0.15 bar	T14403T0012	Light Blue	Red	0.105	2.67	3.66	94.0

Table 3. *Relief Performance*

ORIFICE SIZE		MAXIMUM ALLOWABLE INLET PRESSURE IF OUTLET PRESSURE IS HELD AT OR BELOW 2 psig / 140 mbar	
In.	mm	psig	bar
1/8	3.2	125	8.6
3/16	4.8	65	4.5
1/4	6.4	30	2.1
3/8	9.5	10	0.69
1/2	13	7	0.48

1. The relief performance testing is in accordance with ANSI B109.4 and CGA 6.18, with the regulator set at 7 in. w.c. / 17 mbar, stem linkage disconnected and vented directly to atmosphere using the 3/4 or 1 in. / 19 or 25 mm vent.

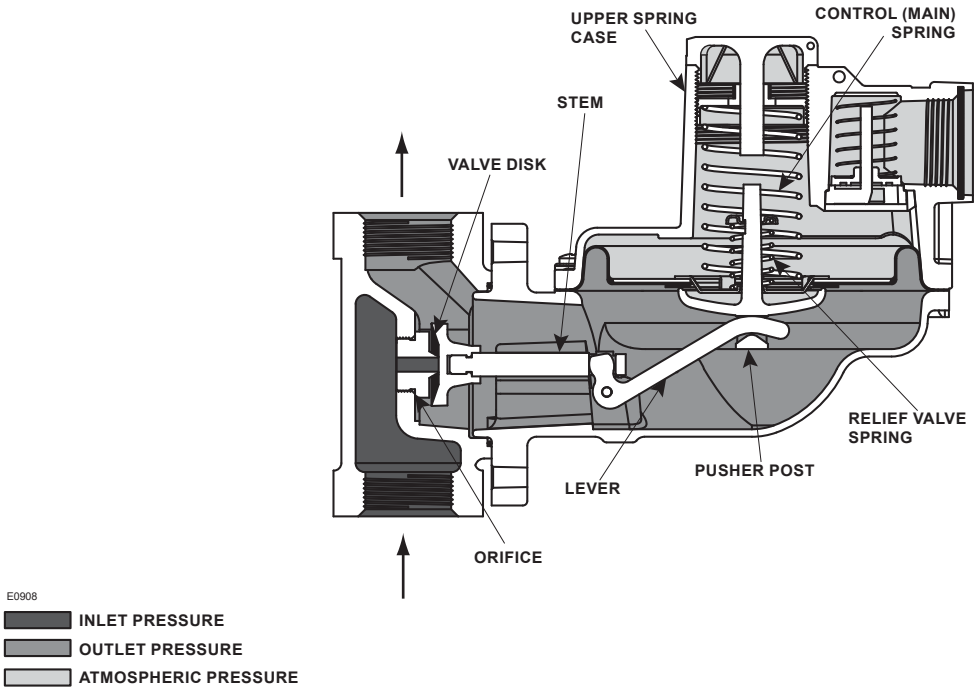

Figure 2. *Type HSR Pressure Regulator Operational Schematic*

Principle of Operation

Refer to Figure 2. When downstream demand decreases, the pressure under the diaphragm increases. This pressure overcomes the regulator setting (which is set by a spring). Through the action of the pusher post assembly, lever and stem, the valve disk moves closer to the orifice and reduces gas flow. If demand downstream increases, pressure under the diaphragm decreases.

Spring force pushes the pusher post assembly downward and the lever, stem and valve disk move away from the orifice.

The Type HSR regulators include an internal relief valve for overpressure protection. If the downstream pressure exceeds the regulator setting by 7 in. w.c. to 1.25 psig / 17 to 86 mbar, depending on the main spring used, the relief valve opens and excess gas escapes through the vent in the upper spring case.

Installation

WARNING

Personal injury, equipment damage or leakage due to escaping gas or bursting of pressure-containing parts might result if these regulators are overpressured or installed where service conditions could exceed the limits for which the regulators were designed or where conditions exceed any ratings of the adjacent piping or piping connections.

To avoid such injury or damage, provide pressure-relieving or pressure-limiting devices (as required by the appropriate code, regulation or standard) to prevent service conditions from exceeding those limits.

Additionally, physical damage to a regulator could cause personal injury and property damage due to escaping gas. To avoid such injury and damage, install the regulator in a safe location.

A regulator may vent some gas to the atmosphere in hazardous or flammable gas service, vented gas might accumulate and cause personal injury, death or property damage due to fire or explosion. Vent a regulator in hazardous gas service to a remote, safe location away from air intakes or any hazardous location. The vent line must be protected against condensation or clogging.

Before installing the regulator, check for damage which might have occurred in shipment. Also check for dirt or foreign matter which may have accumulated in the regulator body or in the pipeline. Apply pipe compound to the external threads of the pipeline and install the regulator so that the flow is in the direction of the arrow cast on the side of the body. The diaphragm actuator assembly can be rotated to any position relative to the body, in 90° increments. ***Remove the two cap screws (key 17) that hold the body to the actuator in order to rotate the diaphragm actuator assembly.***

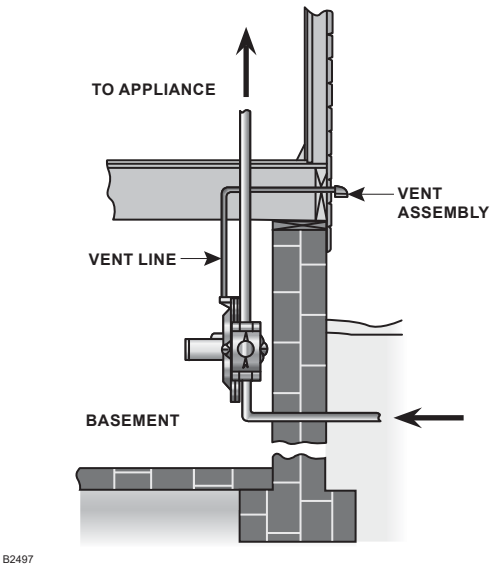

Figure 3. *Typical Vent Line Installation*

Table 4. *Flow and Sizing Coefficients*

ORIFICE SIZE		WIDE-OPEN FOR RELIEF SIZING		C_1	IEC SIZING COEFFICIENTS		
In.	mm	C_g	C_V		X_T	F_D	F_L
1/8	3.2	12.5	0.36	35	0.78	0.82	0.89
3/16	4.8	28.2	0.81			0.82	
1/4	6.4	50	1.43			0.82	
3/8	9.5	105	3.00			0.79	
1/2	13	185	5.29			0.79	

Do not install the regulator in a location where there can be excessive water accumulation, such as directly beneath a downspout or in an undrained pit.

To obtain the maximum flow capacities or other performance characteristics, the length of pipe from the regulator outlet to the meter—or for the first 18 in. / 457 mm, whichever is closer—should have no bends and should be the same size as the regulator outlet. Replace the regulator if water gets into the spring case or the lower casing of the regulator.

HSR Series regulators have a spring case vent (1 or 3/4 NPT) which is screened to prevent insects or foreign material from entering.

CAUTION

You are advised to use new vent piping because defective threads on the relief vent piping may interfere with the venting assembly if the piping obstructs the movement of the vent stabilizer.

On indoor installations, the vent should be piped outside the building, see Figure 3. Remove the screen from the regulator vent connection and connect vent piping from that connection to the outdoors. Vent piping should be as large in diameter as practical, be as short as possible and have a minimum number of bends and elbows. Install a weather and insect resistant vent assembly on the outside end of the pipe, such as a Type Y602. The same installation precautions apply to vent assemblies as the integral regulator vents described previously.

A program of regular inspection of the vent opening should be established to see that it has not become plugged by foreign material. On some installations, such as in areas of heavy snowfall, it may be necessary to install the regulator beneath a protective hood. If other protection is provided from the elements, the vent should be pointing or sloping down sufficiently to allow any condensate to drain. Also check the regulator periodically for external or internal corrosion.

Overpressure Protection

WARNING

Some type of overpressure protection is needed if actual inlet pressure can exceed the outlet pressure rating. Overpressuring any portion of this equipment above the limits given in the Specifications section and Tables 1 and 2 may cause damage to regulator parts, leaks in the regulator or personal injury due to bursting of pressure-containing parts or explosion of accumulated gas.

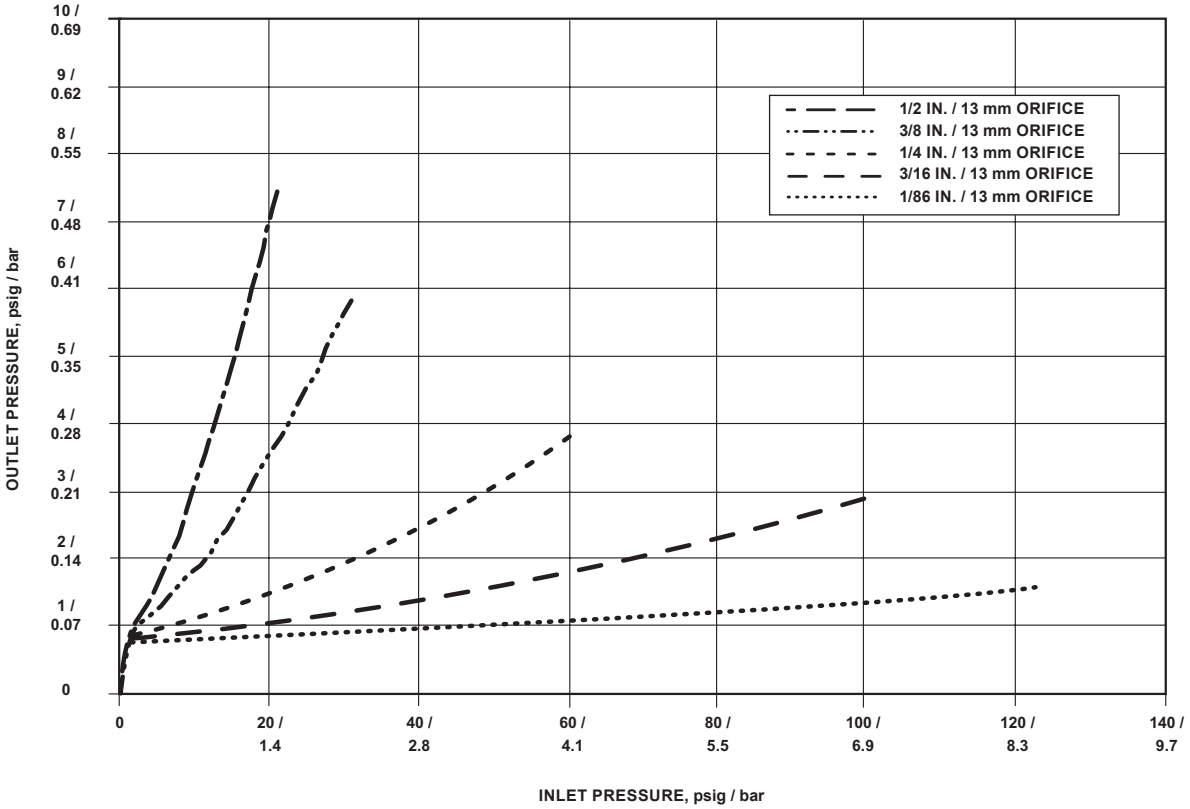

Figure 4. *7 in. w.c. / 17 mbar Setpoint Relief Curves (with lever disconnected, no vent piping and 3/4 or 1 in. / 19 or 25 mm vent)*

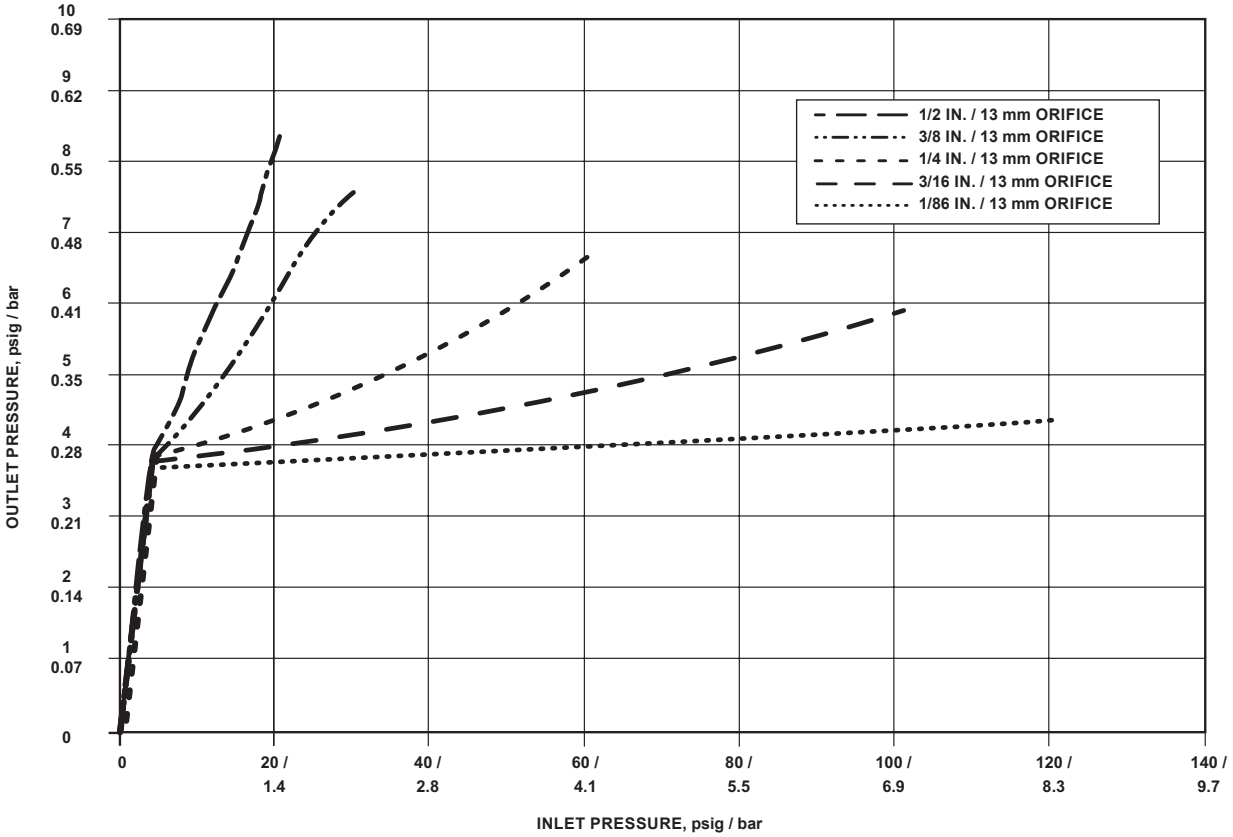

Figure 5. *2 psig / 0.14 bar Setpoint Relief Curves (with lever disconnected, no vent piping and 3/4 or 1 in. / 19 or 25 mm vent)*

Type HSR regulators provide internal relief that limits the total outlet pressure build-up over setpoint. This internal relief may be adequate for the application, if not, provide additional pressure relief or a pressure-limiting device downstream. Regulators should be inspected for damage after any overpressure condition.

Startup

WARNING

To avoid personal injury or property damage due to explosion or damage to regulator or downstream components during startup, release downstream pressure to prevent an overpressure condition on the diaphragm of the regulator.

In order to avoid an overpressure condition and possible equipment damage, pressure gauges should always be used to monitor pressures during startup.

1. Check to see that all appliances are turned off.
2. Slowly open the upstream shutoff valve.
3. Slowly open the downstream shutoff valve.
4. Check all connections for leaks.
5. Make final control spring adjustments according to the adjustment procedures.
6. Light the appliance pilots.

Adjustment

To increase the outlet pressure setting of the regulator, the adjusting screw (key 26, Figure 6) must be turned clockwise. This requires removal of the closing cap (key 8). To reduce the outlet pressure setting, turn the adjusting screw counterclockwise. A pressure gauge should always be used to monitor downstream pressure while adjustments are being made. Do not adjust the spring to produce an outlet pressure setting above the limit identified on the information label. If the required pressure setting is not within the range of the spring being used, substitute with the correct spring, see Table 2. When changing the spring, also change the range identified on the information label to indicate the actual pressure range of the spring in use. After the spring adjustment has been completed, replace the closing cap.

Shutdown

WARNING

To avoid personal injury or property damage due to explosion or damage to regulator or downstream components during shutdown, release downstream pressure to prevent an overpressure condition on the regulator diaphragm.

Installation arrangements may vary, but in any installation it is important that the valves be opened or closed slowly. These steps apply to the typical installation.

1. Slowly close the downstream shutoff valve.
2. Slowly close the upstream shutoff valve.
3. Open vent valves downstream of the regulator.
4. Open vent valves upstream of the regulator.

Maintenance

WARNING

Avoid personal injury or damage to property from sudden release of pressure or uncontrolled gas or other process fluid. Before starting to disassemble, isolate the regulator from all pressure and cautiously release trapped pressure from the regulator. Use gauges to monitor inlet, loading and outlet pressures while releasing these pressures.

These procedures are for gaining access to the diaphragm, valve disk and orifice. All pressure must be released from the diaphragm actuator assembly before the following steps can be performed.

While using the following procedures, refer to Figure 6 for key number locations.

Diaphragm Replacement

1. Remove the closing cap (key 8) and adjusting screw (key 26).
2. Remove the spring case machine screws (key 9) out of the spring case (key 1) and remove the spring case and control spring (key 25).
3. Lift the diaphragm (key 11) slightly and slide it away from the lever (key 4), so that the pusher post (key 12) releases the lever.

4. Remove the relief spring retainer (key 14). Note the direction of the spring retainer assembly to aid in proper reassembly. Remove the relief valve spring (key 10).
5. Remove the diaphragm (key 11). Examine the diaphragm and replace if necessary.
6. Reassemble in the reverse order of the above procedures. Before attaching the spring retainer (key 14) to the pusher post (key 12) to secure the new diaphragm (key 11), place the loosely assembled diaphragm into position in the lower casing (key 2), being sure the pusher post is properly hooked on the lever (key 4). Rotate the diaphragm so that the diaphragm and lower casing holes align. Check the diaphragm for proper orientation. The open slot in the spring retainer is inserted from the notched side of the pusher post. Install the spring retainer and proceed with reassembly. Tighten the spring case machine screws (key 9) to 15 to 30 in-lbs / 1.7 to 3.9 N•m.

Valve Disk and Orifice Replacement

1. Remove the cap screws (key 17) which hold the actuator assembly to the body.
2. The regulator can be removed from the body, exposing the disk (key 23) and the orifice (key 22).
3. Examine the disk (key 23). If it is nicked, cut or otherwise damaged, the disk should be removed from the valve stem (key 5) and replaced with a new part.
4. Examine the seating edge of the orifice (key 22). If it is nicked or rough, it should be unscrewed from the body with a thin wall 7/8 in. / 22 mm socket wrench and replaced with a new orifice to provide proper shutoff. Treat the external threads of the new orifice with lubricant before reassembling, tightening to 25 to 35 ft-lbs / 34 to 48 N•m of torque.
5. Reassemble in the reverse order of the above procedures. Tighten the cap screws (key 17) to 6 to 10 ft-lbs / 8.1 to 14 N•m.

Regulator Reassembly

As indicated by the square callouts in Figure 6 it is recommended that a good quality pipe thread sealant be applied to pressure connections and fittings and a good quality lubricant be applied to O-rings. Also apply an anti-seize compound to the adjusting screw threads and other areas as needed.

Parts Ordering

The type number, orifice size, spring range and date of manufacture are located on the spring case. Always provide this information in any correspondence with your local Sales Office regarding replacement parts or technical assistance.

When ordering replacement parts, reference the key number of each needed part as found in the following parts list. If construction changes are made in the field, be sure that the information label is also changed to reflect the most recent construction.

Parts List

Key	Description	Part Number
1	Spring Case Assembly	
	3/4 in. / 19 mm Vent	T40655T0GY2
	1 in. / 25 mm Vent	T40656T0GY2
2	Lower Casing, Aluminum	T80565T0GY2
3	Screen, 18-8 Stainless steel	T1121338982
4	Lever, Cast steel	T21184T0012
5	Stem, Aluminum	T14385T0012
6	Straight Pin, 18-8 Stainless steel	T14397T0012
7	Machine Screw, Carbon-plated steel (2 required)	1E175828982
8	Closing Cap	
	Black	T21187T0012
	Red	T21187T0022
9	Machine Screw, Carbon steel (8 required)	T13526T0012
10	Relief Valve Spring, 302 Stainless steel, Silver	T14406T0012
11	Diaphragm	T21163T0012
12	Pusher Post, Acetal	T40653T0012
13	Lower Spring Seat, Zinc-plated steel	T14396T0012
14	Relief Spring Retainer, 18-8 Stainless steel	T13613T0012
15	Body, Cast iron	
	Globe Body	
	3/4 NPT	T21183T0GY2
	3/4 x 1 NPT	T21199T0GY2
	1 NPT	T21182T0GY2
	Angle Body	
	3/4 NPT	T21193T0GY2
	3/4 x 1 NPT	T21200T0GY2
	1 NPT	T21194T0GY2
16	O-ring, Nitrile (NBR)	T14057T0042
17	Cap Screw, Zinc-plated steel (2 required)	1A352624052
22*	Orifice, Aluminum	
	1/8 in. / 3.2 mm	1A936709012
	3/16 in. / 4.8 mm	00991209012
	1/4 in. / 6.4 mm	0B042009012
	3/8 in. / 9.5 mm	0B042209012
	1/2 in. / 13 mm	1A928809012
23*	Disk, Nitrile (NBR)	T14386T0012
25	Spring, Zinc-plated steel	
	4 to 6 in. w.c. / 10 to 15 mbar, Orange	T14398T0012
	6 to 8 in. w.c. / 15 to 20 mbar, Yellow	T14399T0012
	8 to 10 in. w.c. / 20 to 25 mbar, Black	T14405T0012
	10 to 12.5 in. w.c. / 25 to 31 mbar, Silver	T14400T0012
	12.5 to 20 in. w.c. / 31 to 50 mbar, Gray	T14401T0012
	20 to 35 in. w.c. / 50 to 87 mbar, Pink	T14402T0012
	1.25 to 2.2 psig / 0.09 to 0.15 bar, Light Blue	T14403T0022
26	Adjusting Screw, Delrin®	T21186T0012
27	Information Label	- - - - - - - - - - -
31	Closing Cap O-ring, Nitrile (NBR) (only CSA)	GE13895T012

*Recommended spare part
Delrin® is a mark owned by E.I. du Pont de Nemours and Co.

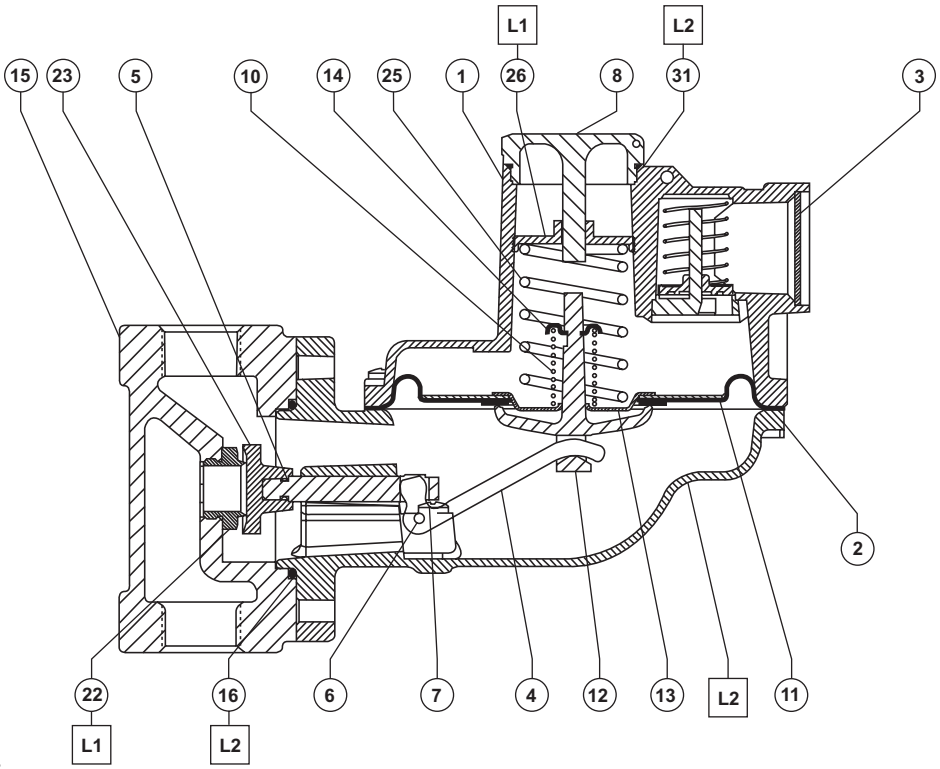

☐ **APPLY LUBRICANT**
L1 = ANTI-SEIZE COMPOUND
L2 = MULTI-PURPOSE POLYTETRAFLUOROETHYLENE (PTFE) LUBRICANT

NOTE: KEY 31 ONLY USED ON UNITS WITH CSA APPROVAL.

1. Lubricants must be selected such that they meet the temperature requirements.

Figure 6. *Type HSR Regulator Assembly*

Webadmin.Regulators@emerson.com
Fisher.com
Facebook.com/EmersonAutomationSolutions
LinkedIn.com/company/emerson-automation-solutions
Twitter.com/emr_automation

Emerson Automation Solutions

Americas
McKinney, Texas 75070 USA
T +1 800 558 5853
+1 972 548 3574

Europe
Bologna 40013, Italy
T +39 051 419 0611

Asia Pacific
Singapore 128461, Singapore
T +65 6777 8211

Middle East and Africa
Dubai, United Arab Emirates
T +971 4 811 8100

D103074X012 © 2003, 2021 Emerson Process Management Regulator Technologies, Inc. All rights reserved. 06/21.
The Emerson logo is a trademark and service mark of Emerson Electric Co. All other marks are the property of their prospective owners. Fisher™ is a mark owned by Fisher Controls International LLC, a business of Emerson Automation Solutions.

The contents of this publication are presented for informational purposes only, and while every effort has been made to ensure their accuracy, they are not to be construed as warranties or guarantees, express or implied, regarding the products or services described herein or their use or applicability. All sales are governed by our terms and conditions, which are available upon request. We reserve the right to modify or improve the designs or specifications of such products at any time without notice.

Emerson Process Management Regulator Technologies, Inc. does not assume responsibility for the selection, use or maintenance of any product. Responsibility for proper selection, use and maintenance of any Emerson Process Management Regulator Technologies, Inc. product remains solely with the purchaser.

EMERSON™